Ram S990 Awning

REVISIONS					
ZONE	REV		DESCRIPTION	DATE	APPROVED

DRAWING APPROVAL

- ☐ APPROVED
- ☐ APPROVED AS NOTED
- ☐ REVISE AND RESUBMIT

SIGN _____ DATE _____

Please return one print set marked with your signature, any comments, and notation of approval for fabrication.

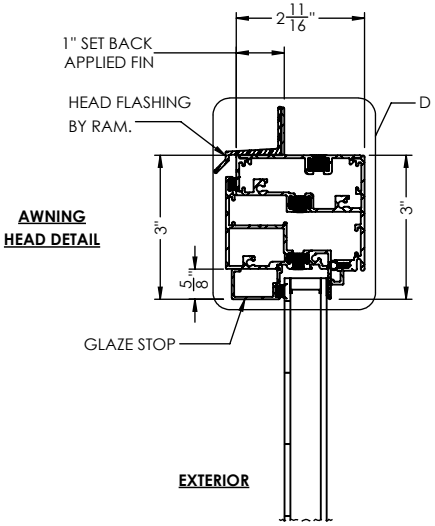

AWNING HEAD DETAIL

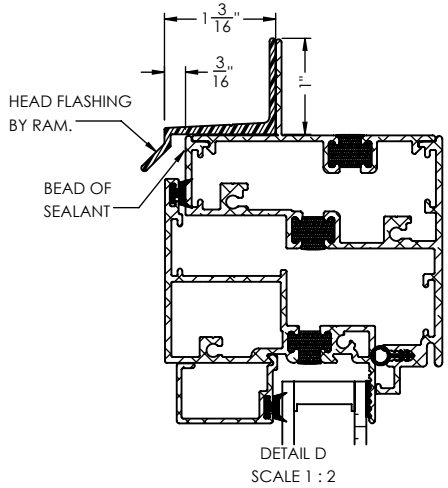

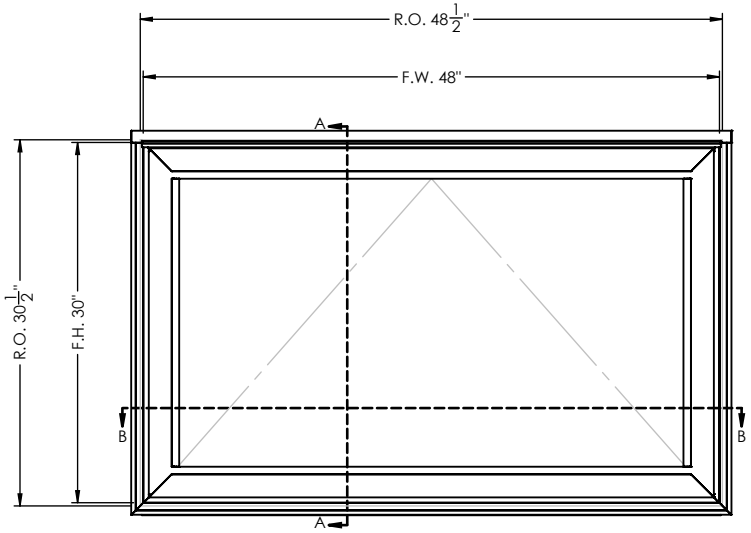

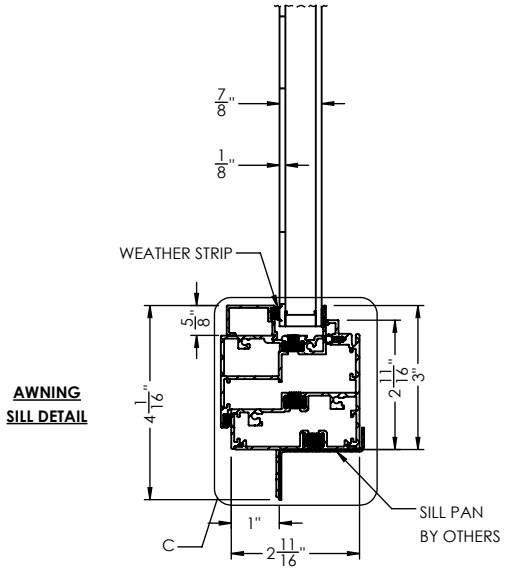

AWNING SILL DETAIL

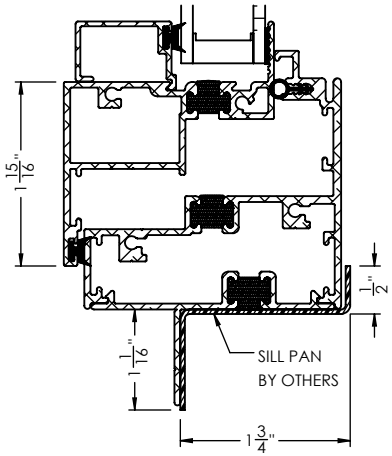

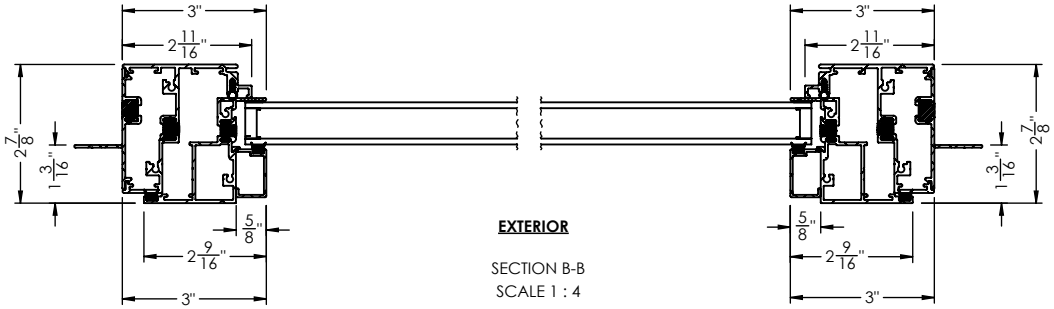

AWNING LEFT JAMB DETAIL

AWNING RIGHT JAMB DETAIL

PROPRIETARY AND CONFIDENTIAL

THE INFORMATION CONTAINED IN THIS DRAWING IS THE SOLE PROPERTY OF RAM WINDOWS & DOORS. ANY REPRODUCTION IN PART OR AS A WHOLE WITHOUT THE WRITTEN PERMISSION OF RAM WINDOWS & DOORS IS PROHIBITED.

RAM WINDOWS & DOORS

LEAD TIME		CUSTOMER	
GLASS WARRANTY		PROJECT	
FRAME WARRANTY		CITY	
FINISH WARRANTY		STATE	
U-FACTOR		OUTER GLASS	
SHGC		AIR SPACE	
OA GLASS THICKNESS	7/8"	INNER GLASS	

UNLESS OTHERWISE SPECIFIED: DIMENSIONS ARE IN INCHES TOLERANCES:

FRACTIONAL: ± 1/16
ANGULAR: MACH/BEND: ± 1
TWO PLACE DECIMAL ± 0.01
THREE PLACE DECIMAL ± 0.005

MATERIAL:

DO NOT SCALE DRAWING

	NAME	DATE
DRAWN	CG	9/26/2024
ENG	R.W	
MARK		
QTY.		
FINISH		
DP		
SCALE: 1:16		

RAM WINDOWS AND DOORS

TITLE: RAM S990 AWNING

SIZE	WTS NUMBER	REV
A	S990-AWN-Details-Applied	
	WEIGHT: 54.353	SHEET 1 OF 1